Courtesy of N7RK

HOWARD RADIO CO.

MODEL 440, Series 1,2
Schematic, Voltage

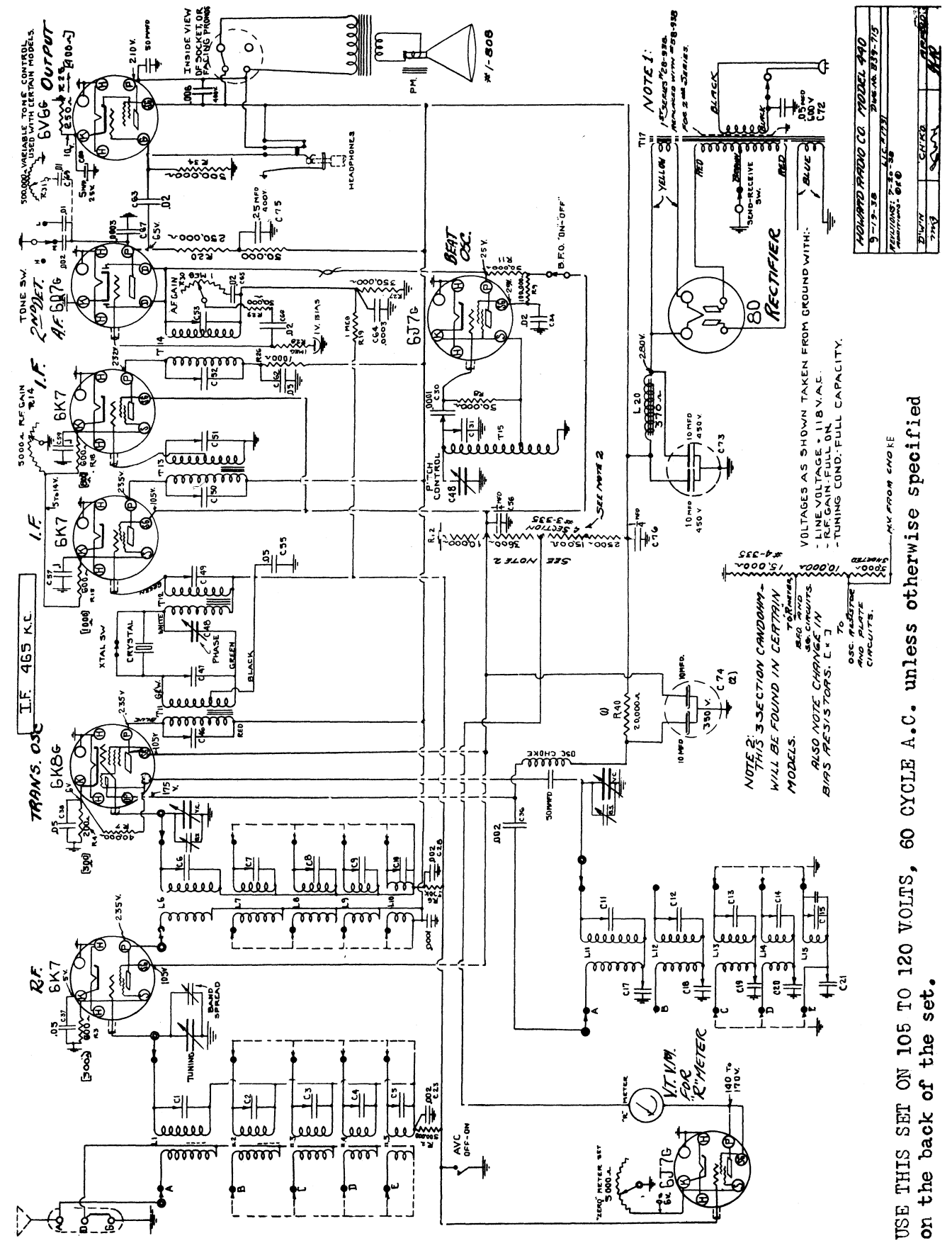

ALIGNMENT PROCEDURE

PRELIMINARY:

Output meter connection - 4000 ohm or more copper oxide meter across 5 ohm terminals. Shunt with speaker.

Output meter reading to indicate .5 watt . . . . . 1.575 V.

Average sensitivity in microvolts for .5 watt output . . . . . See chart below

Generator ground lead connection . . . . . Direct to chassis

A.V.C. Switch . . . . . On

Band spread dial set at 100 . . . . . Min. Capacity

Generator modulation . . . . . 30%, 400 cycles

Position of volume control A.F. gain Position of volume control R.F. gain . Full On

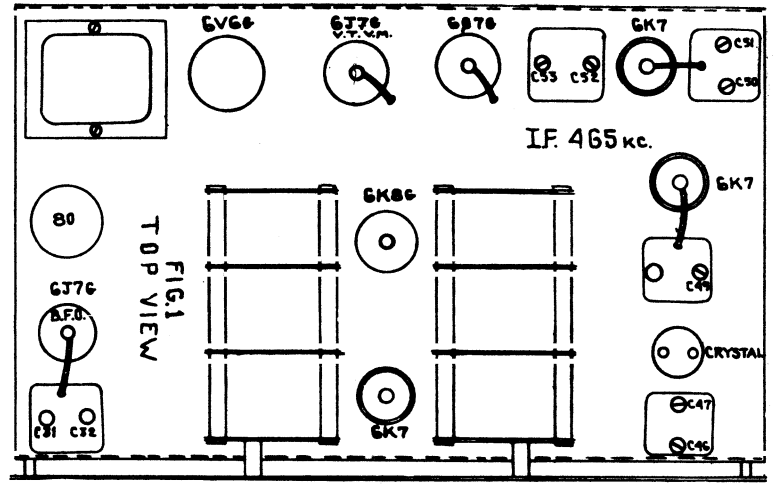

FIG. 1
TOP VIEW

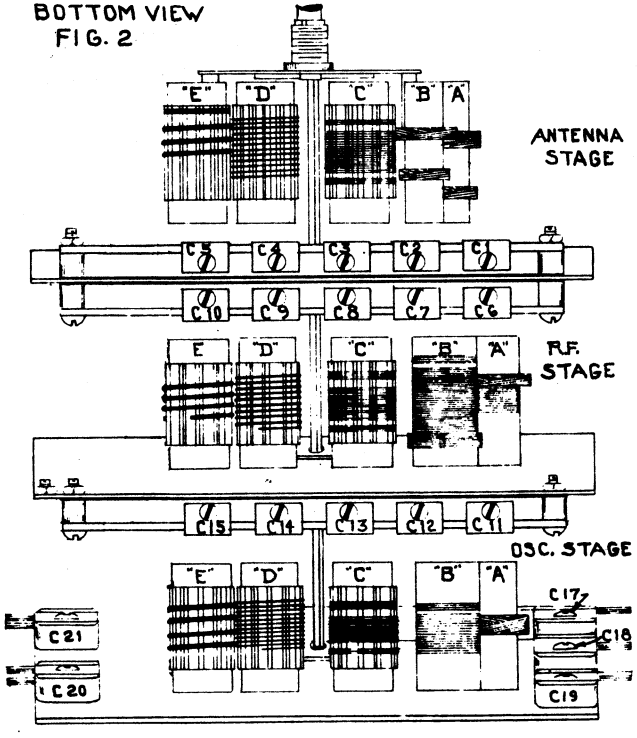

NOTE 1: When aligning the I.F. channel, a condenser of .05 MFD may be used in series with the generator lead.

NOTE 2: When aligning the broadcast band, a 250 MMFD condenser may be used in series with the signal generator.

NOTE 3: When aligning the short wave bands, a 400 ohm resistor may be used in series with the signal generator.

POSITION OF VARIABLE AND BAND SW.	GENERATOR FREQUENCY	GENERATOR CONNECTION	TRIMMER LOCATION	TRIMMER ADJUSTMENTS IN ORDER	TRIMMER FUNCTION	APPROX. MICRO-VOLTS
Closed "A" Band	465 KC	6L7 Grid	See Fig.1	C53,52,51, 50,49,47,46	I.F.	15
36 MC "E"	36 MC	A-D-G Ant. Term.	See Fig.2	C15, 10, 5	Osc Trans.Ant.	3
16 MC "E"	16 MC	A-D-G Ant. Term.		C21	Padder	3
15 MC "D"	15 MC	A-D-G Ant. Term.	See Fig.2	C14, 9, 4	Osc.Trans.Ant.	1
7 MC "D"	7 MC	A-D-G Ant. Term.			Padder	1
6 MC "C"	6 MC	A-D-G Ant. Term.	See Fig.2	C13, 8, 3	Osc.Trans.Ant.	1
3 MC "C"	3 MC	A-D-G Ant. Term.		C19	Padder	1
2.6 MC "B"	2.6 MC	A-D-G Ant. Term.	See Fig.2	C12, 7, 2	Osc.Trans.Ant.	1
1.3 MC "B"	1.3 MC	A-D-G Ant. Term.		C18	Padder	1
1.2 MC "A"	1200 KC	A-D-G Ant. Term.	See Fig.2	C11, 6, 1	Osc.Trans.Ant.	1
.6 MC "A"	600 KC	A-D-G Ant. Term.		C17	Padder	1

NOTE 4: When using a CRYSTAL, set PHASING CONTROL to almost minimum capacity. See special alignment instructions for Crystal MODEL 438